Static Route 1/3

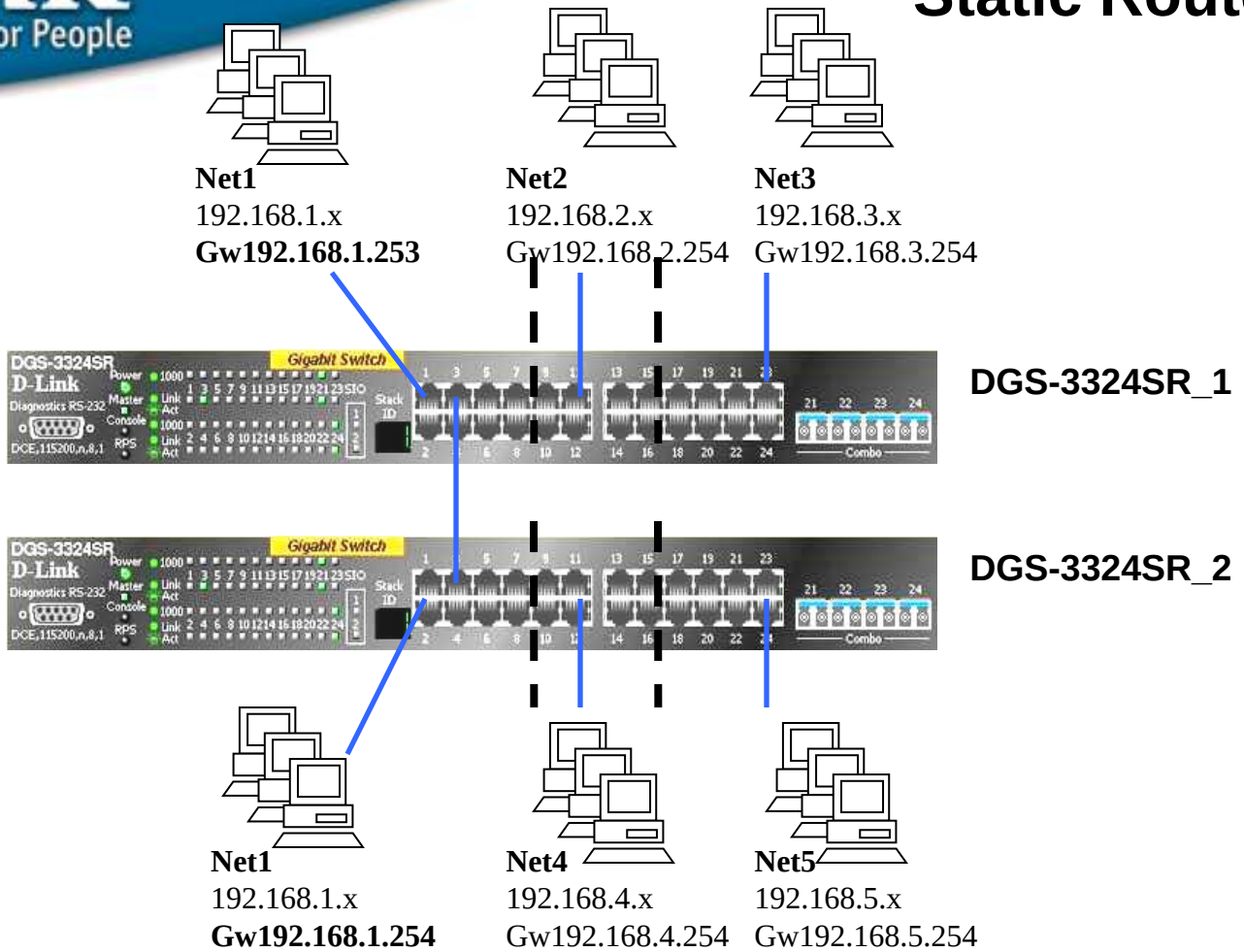

Objective:

1. **Networks at DGS-3324SR_1 (i.e, Net2, Net3) can ping Networks at DGS-3324SR_2 (Net4, Net45)**
2. **Networks at DGS-3324SR_2 (I.e, Net4, Net5) can ping Networks at DGS-3324SR_1 (Net2, Net3)**

Static Route 2/3

PROCEDURE:

AT DGS-3324SR_ 1(top)

1. Configure VLAN and IP interfaces.

```
config vlan default delete 1:1-1:24
create vlan v101 tag 101
config vlan v101 add untagged 1:1-1:8
create ipif net1 192.168.1.253/24 v101 state enabled

create vlan v102 tag 102
config vlan v102 add untagged 1:9-1:16
create ipif net2 192.168.2.254/24 v102 state enabled

create vlan v103 tag 103
config vlan v103 add untagged 1:17-1:24
create ipif net3 192.168.3.254/24 v103 state enabled
```

2. Create Static Route

```
create iproute 192.168.4.0/24 192.168.1.254
create iproute 192.168.5.0/24 192.168.1.254
```

3. For checking routing table

```
show iproute
```

Static Route 3/3

PROCEDURE:

AT DGS-3324SR_ 2(Bottom)

1. Configure VLAN and IP interfaces.

```
config vlan default delete 1:1-1:24
create vlan v101 tag 101
config vlan v101 add untagged 1:1-1:8
create ipif net1 192.168.1.254/24 v101 state enabled

create vlan v104 tag 104
config vlan v104 add untagged 1:9-1:16
create ipif net4 192.168.4.254/24 v104 state enabled

create vlan v105 tag 105
config vlan v105 add untagged 1:17-1:24
create ipif net5 192.168.5.254/24 v105 state enabled
```

2. Create Static Route

```
create iproute 192.168.2.0/24 192.168.1.253
create iproute 192.168.3.0/24 192.168.1.253
```

3. For checking routing table

```
show iproute
```

TEST:

1. **Net5 (at bottom) can ping Net2 and Net3 (at top)**
2. **Net2 (at top) can ping Net4 and Net5. Etc.**

RIP (Routing Information Protocol)

- RIP is an Interior Gateway Protocol (IGP), Distance-vector routing protocol
- Use broadcast UDP packet to exchange routing information, IP network address and an integer distance to that network. RIP route maintain only the best route to a destination.
- Update every 30 sec
- Directly connected network → 1, unreachable network → 16
- RIP v1 (RFC 1058), and RIP v2 (RFC 1723)
- RIP v1 uses a "Classful" addressing scheme.
- RIP v2 is a "Classless" routing scheme and authentication of routing updates
- If there are subnetting networks (e.g, 10.x.x.x network with 255.255.0.0 mask), RIP v1 cannot be selected, and RIPv2 is needed.

RIP 1/3

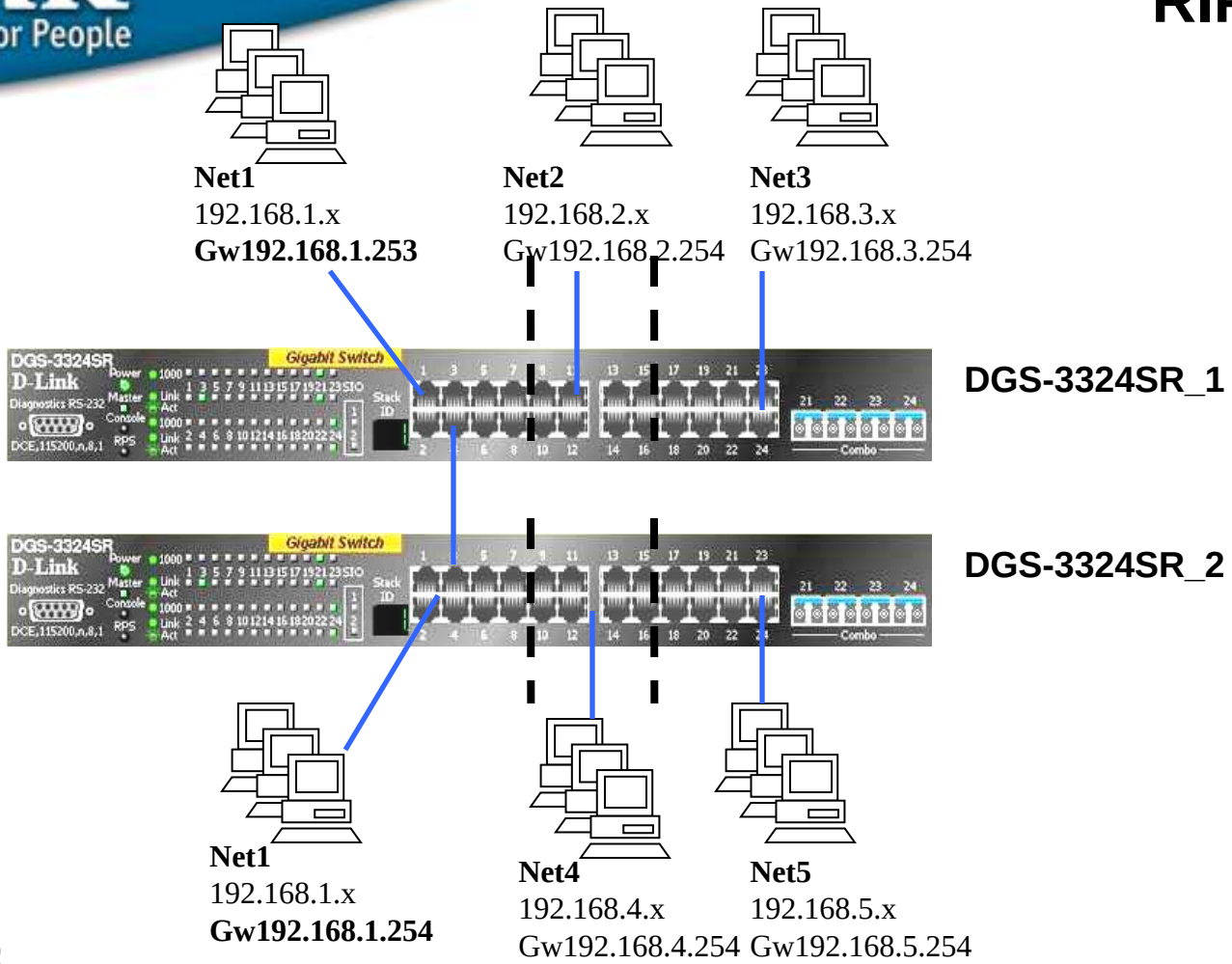

Objective:

1. **DGS-3324SR_1 can learn the networks (i.e, Net4 and Net5) at DGS-3324SR_2.**
2. **DGS-3324SR_2 can learn the networks (i.e, Net2 and Net3) at DGS-3324SR_1.**

RIP 2/3

PROCEDURE:

AT DGS-3324SR_1(TOP)

1. **Configure VLAN and IP interfaces for net1, Net2, and Net3, as in previous example.**
2. **Enable RIP, and enable the associated Interface or enable all**
   enable rip
   config rip all state enabled
   Or config rip ipif net1 tx_mode v2_only rx_mode v2_only state enabled
   (and enable other interfaces)

AT DGS-3324SR_2 (Bottom)

1. **Configure VLAN and IP interfaces for net1, Net4, and Net5, referring to previous example.**
2. **Enable RIP, and enable the associated Interface or enable all**
   enable rip
   config rip all state enabled
   Or config rip ipif net1 tx_mode v2_only rx_mode v2_only state enabled
   (and enable other interfaces)

RIP 3/3

TEST:

- **At top, “show iproute” to check whether Net4 and Net5 are learned by RIP**
- **At bottom, “show iproute” to check whether Net2 and Net3 are learned by RIP.**
- **Ping test to networks at remote switch.**